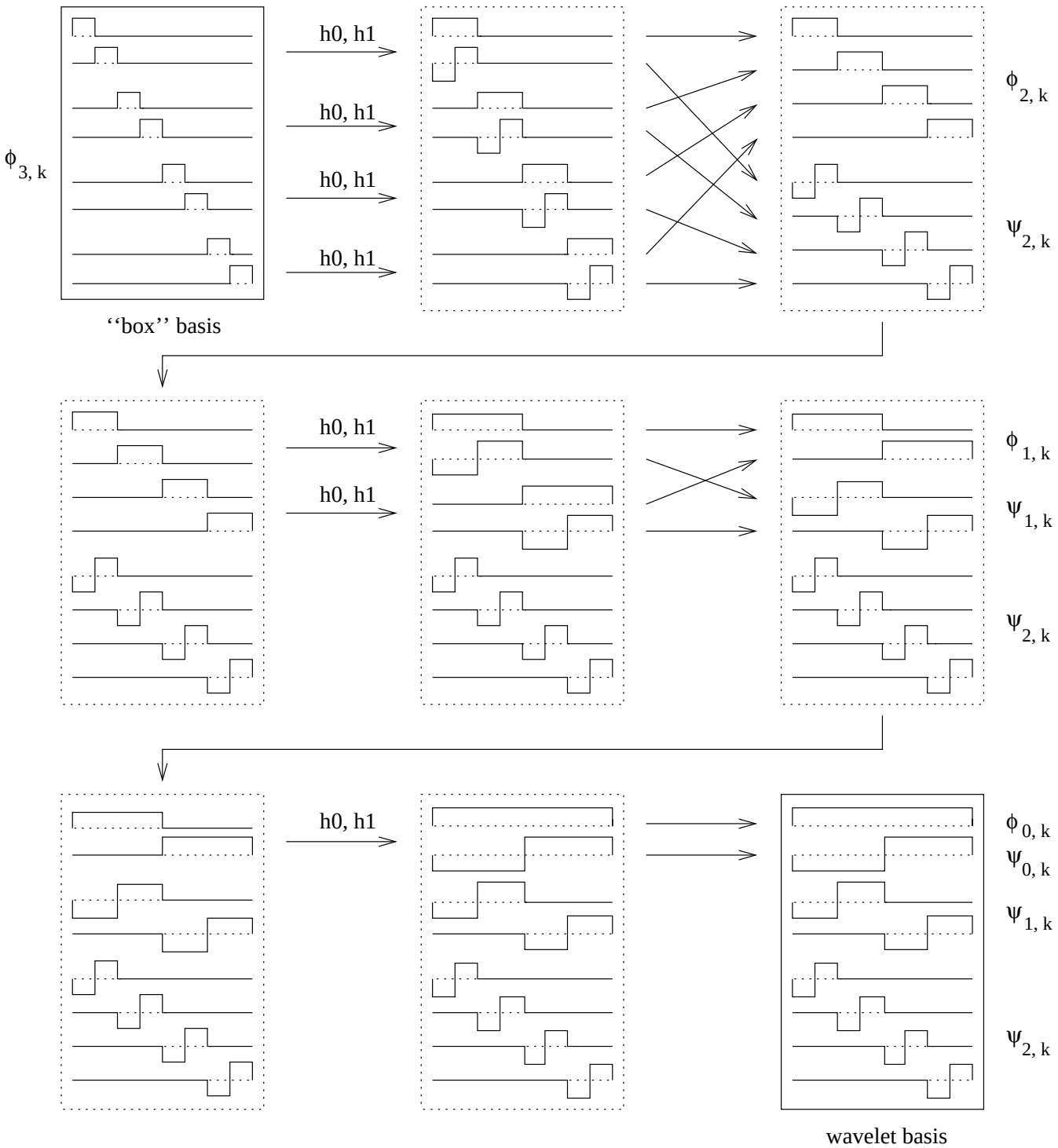
h0, h1
h0, h1
h0, h1
h0, h1
$\phi_{3,k}$
$\phi_{2,k}$
$\psi_{2,k}$
''box'' basis
h0, h1
h0, h1
$\phi_{1,k}$
$\psi_{1,k}$
$\psi_{2,k}$
h0, h1
$\phi_{0,k}$
$\psi_{0,k}$
$\psi_{1,k}$
$\psi_{2,k}$
wavelet basis